15.Malfunction Indicator Light

A: PROCEDURE

1. Activation of malfunction indicator light. <Ref. to EN(H4DOTC)(diag)-56, ACTIVATION OF MALFUNCTION INDICATOR LIGHT, Malfunction Indicator Light.>
↓
2. Malfunction indicator light does not come on. <Ref. to EN(H4DOTC)(diag)-57, MALFUNCTION INDICATOR LIGHT DOES NOT COME ON, Malfunction Indicator Light.>
↓
3. Malfunction indicator light does not go off. <Ref. to EN(H4DOTC)(diag)-59, MALFUNCTION INDICATOR LIGHT DOES NOT GO OFF, Malfunction Indicator Light.>
↓
4. Malfunction indicator light does not blink. <Ref. to EN(H4DOTC)(diag)-60, MALFUNCTION INDICATOR LIGHT DOES NOT BLINK, Malfunction Indicator Light.>
↓
5. Malfunction indicator light keep blinking. <Ref. to EN(H4DOTC)(diag)-62, MALFUNCTION INDICATOR LIGHT REMAINS BLINKING, Malfunction Indicator Light.>

B: ACTIVATION OF MALFUNCTION INDICATOR LIGHT

1) When the ignition switch is turned to ON (engine OFF), the malfunction indicator light in the combination meter illuminates.

NOTE:
If the malfunction indicator light does not illuminate, perform diagnostics of the CHECK ENGINE light circuit or the combination meter circuit. <Ref. to EN(H4DOTC)(diag)-57, MALFUNCTION INDICATOR LIGHT DOES NOT COME ON, Malfunction Indicator Light.>

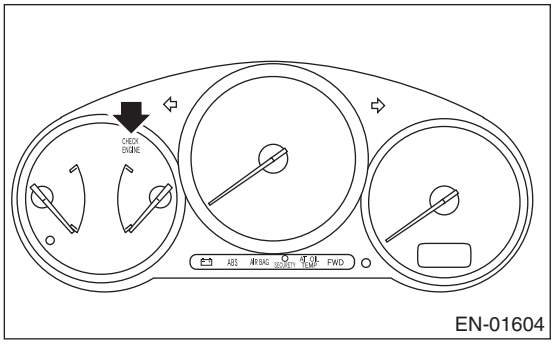

2) After starting the engine, the malfunction indicator light goes out. If it does not, either the engine or the emission control system has a problem.

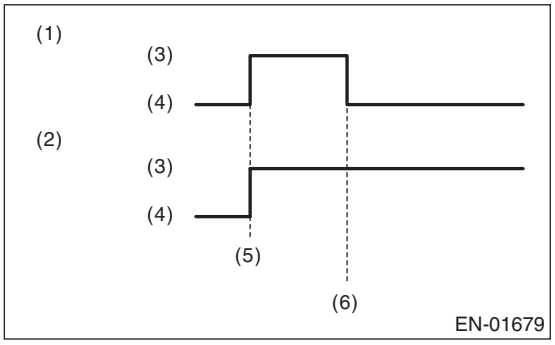

(1) No faulty
(2) Trouble occurs
(3) ON
(4) OFF
(5) Ignition switch ON
(6) Engine start

3) If the diagnostic system detects a misfire which could damage the catalyst, the malfunction indicator light will blink at a cycle of 1 Hz.

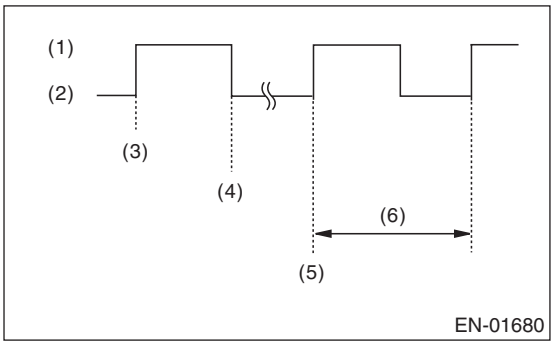

(1) ON
(2) OFF
(3) Ignition switch ON
(4) Engine start
(5) Misfire start
(6) 1 second

4) When the ignition switch is turned to ON (engine off) or to “START” with the test mode connector connected, the malfunction indicator light blinks at a cycle of 3 Hz.

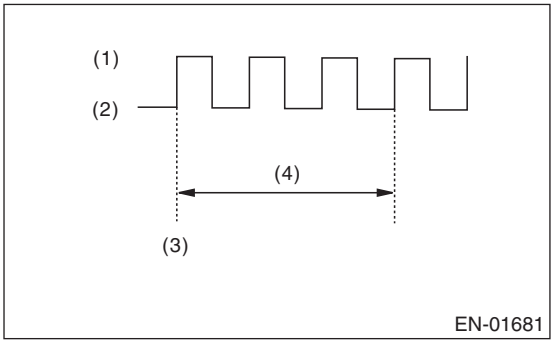

(1) ON
(2) OFF
(3) Ignition switch ON
(4) 1 second

C: MALFUNCTION INDICATOR LIGHT DOES NOT COME ON

DIAGNOSIS:

The malfunction indicator light circuit is open or shorted.

TROUBLE SYMPTOM:

When the ignition switch is turned to ON (engine OFF), malfunction indicator light does not come on.

WIRING DIAGRAM:

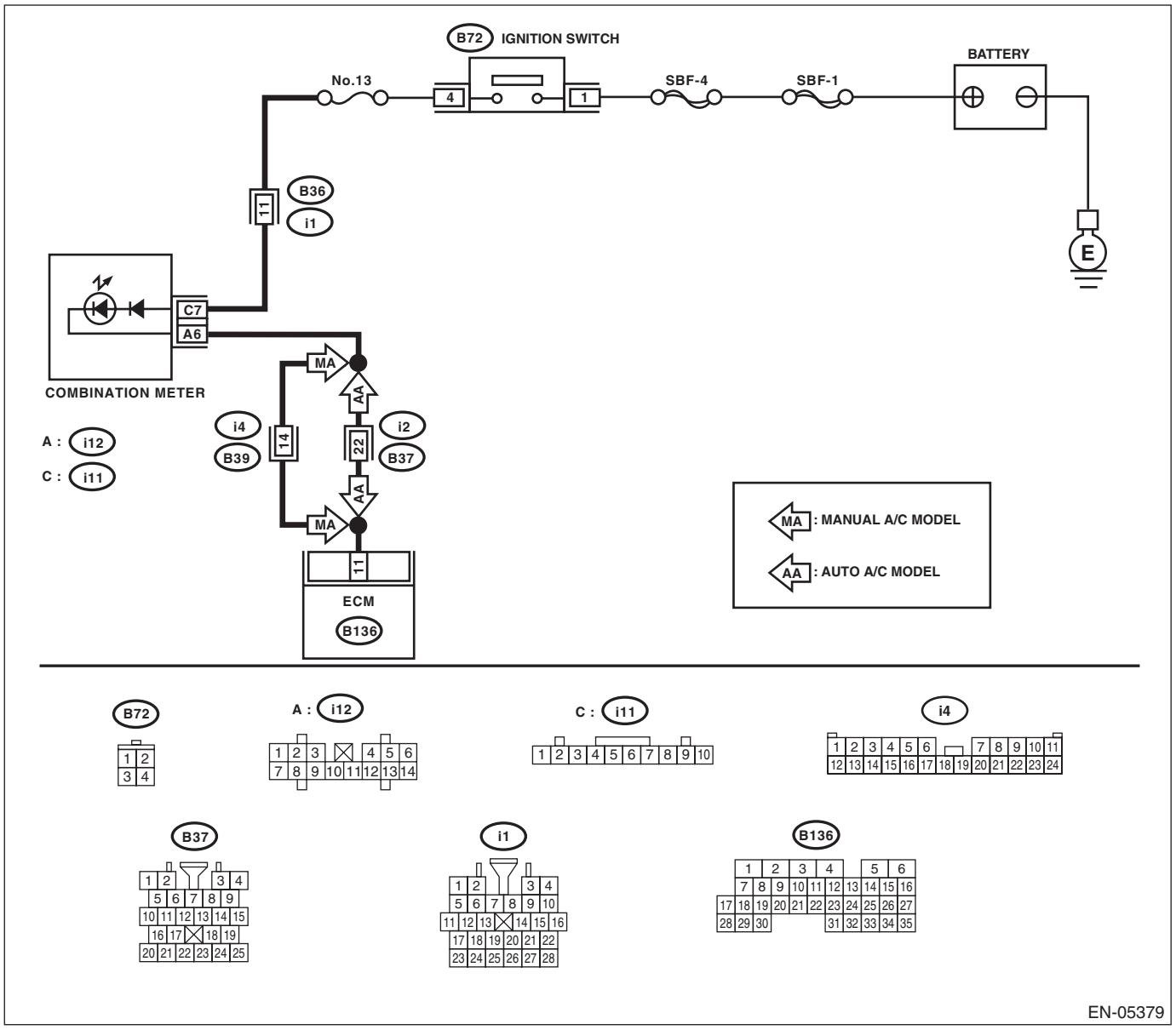

	Step	Check	Yes	No
1	**CHECK OUTPUT SIGNAL OF ECM.** 1) Turn the ignition switch to ON. 2) Measure the voltage between ECM and chassis ground. ***Connector & terminal*** ***(B136) No. 11 (+) — Chassis ground (–):***	Is the voltage less than 1 V?	Go to step **4**.	Go to step **2**.
2	**CHECK POOR CONTACT.**	Does the malfunction indicator light illuminate when shaking or pulling the ECM connector and harness?	Repair poor contact of the ECM connector.	Go to step **3**.
3	**CHECK ECM CONNECTOR.**	Is the ECM connector correctly connected?	Replace the ECM. <Ref. to FU(H4DOTC)-50, Engine Control Module (ECM).>	Repair the connection of ECM connector.
4	**CHECK HARNESS BETWEEN ECM AND COMBINATION METER CONNECTOR.** 1) Turn the ignition switch to OFF. 2) Remove the combination meter. <Ref. to IDI-11, Combination Meter.> 3) Disconnect the connector from the ECM and combination meter. 4) Measure the resistance of harness between ECM and combination meter connector. ***Connector & terminal*** ***(B136) No. 11 — (i12) No. 6:***	Is the resistance less than 1 Ω?	Go to step **5**.	Repair the harness and connector. NOTE: In this case, repair the following item: • Open circuit of harness between ECM and combination meter connector • Poor contact of coupling connector
5	**CHECK POOR CONTACT.** Check poor contact of combination meter connector.	Is there poor contact in combination meter connector?	Repair the poor contact of combination meter connector.	Go to step **6**.
6	**CHECK HARNESS BETWEEN COMBINATION METER AND IGNITION SWITCH CONNECTOR.** 1) Turn the ignition switch to ON. 2) Measure the voltage between combination meter connector and chassis ground. ***Connector & terminal*** ***(i11) No. 7 (+) — Chassis ground (–):***	Is the voltage 10 V or more?	Replace the combination meter circuit board. <Ref. to IDI-11, Combination Meter.>	Check the following item and repair if necessary. NOTE: • Blown out of fuse (No. 13) • Open or short circuit of harness between fuse (No. 13) and battery terminal • Poor contact of ignition switch connector

D: MALFUNCTION INDICATOR LIGHT DOES NOT GO OFF

DIAGNOSIS:
The malfunction indicator light circuit is shorted.
TROUBLE SYMPTOM:
Although malfunction indicator light illuminates when the engine runs, DTC is not shown on the Subaru Select Monitor or general scan tool display.
WIRING DIAGRAM:

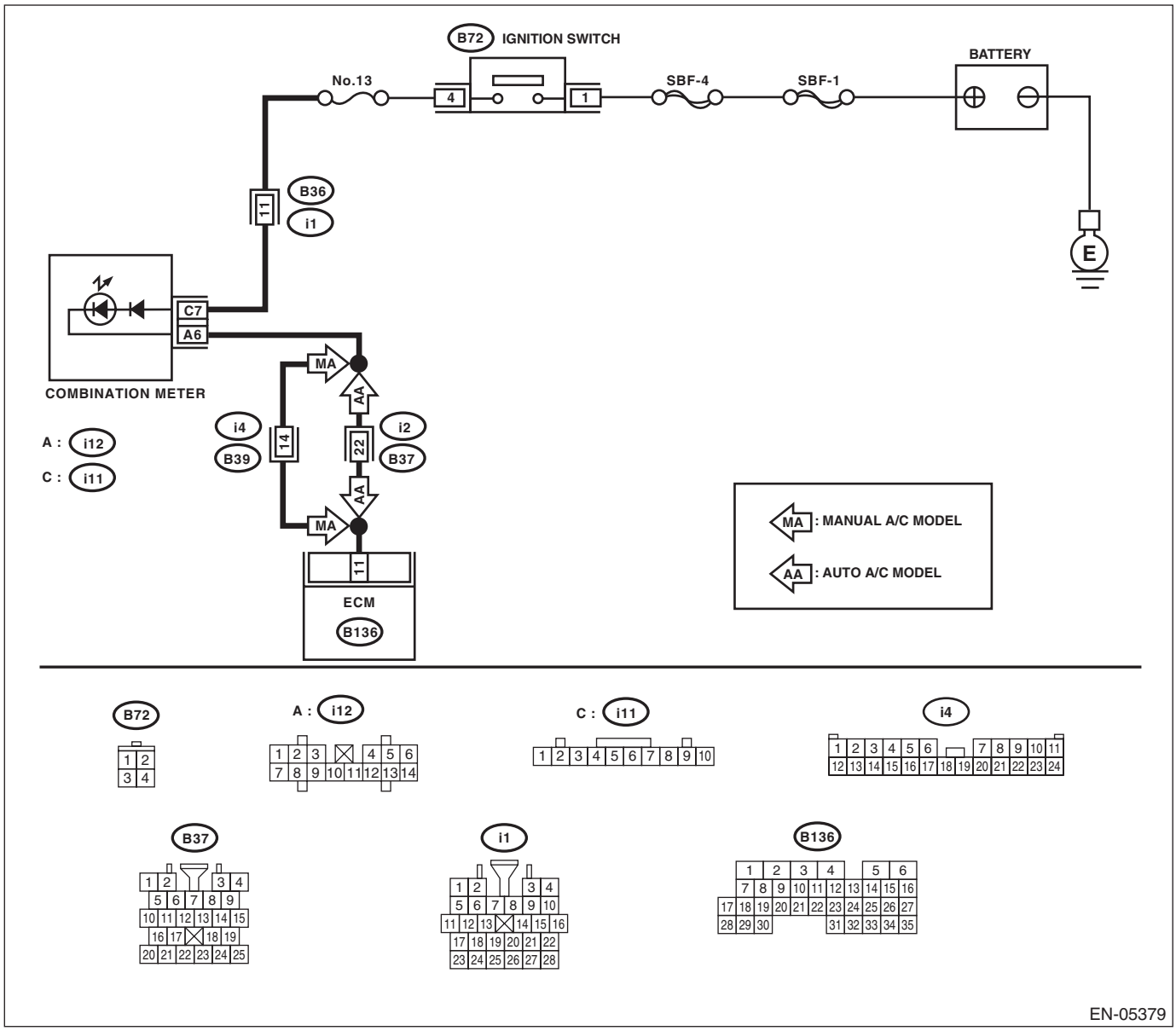

Step		Check	Yes	No
1	**CHECK HARNESS BETWEEN ECM AND COMBINATION METER CONNECTOR.** 1) Turn the ignition switch to OFF. 2) Disconnect the connectors from the ECM. 3) Turn the ignition switch to ON.	Does the malfunction indicator light illuminate?	Repair the short circuit of harness between ECM and combination meter connector.	Replace the ECM. <Ref. to FU(H4DOTC)-50, Engine Control Module (ECM).>

E: MALFUNCTION INDICATOR LIGHT DOES NOT BLINK

DIAGNOSIS:

- The malfunction indicator light circuit is open or shorted.
- Test mode connector circuit is open.

TROUBLE SYMPTOM:

When in Inspection Mode, malfunction indicator light does not blink at a cycle of 3 Hz.

WIRING DIAGRAM:

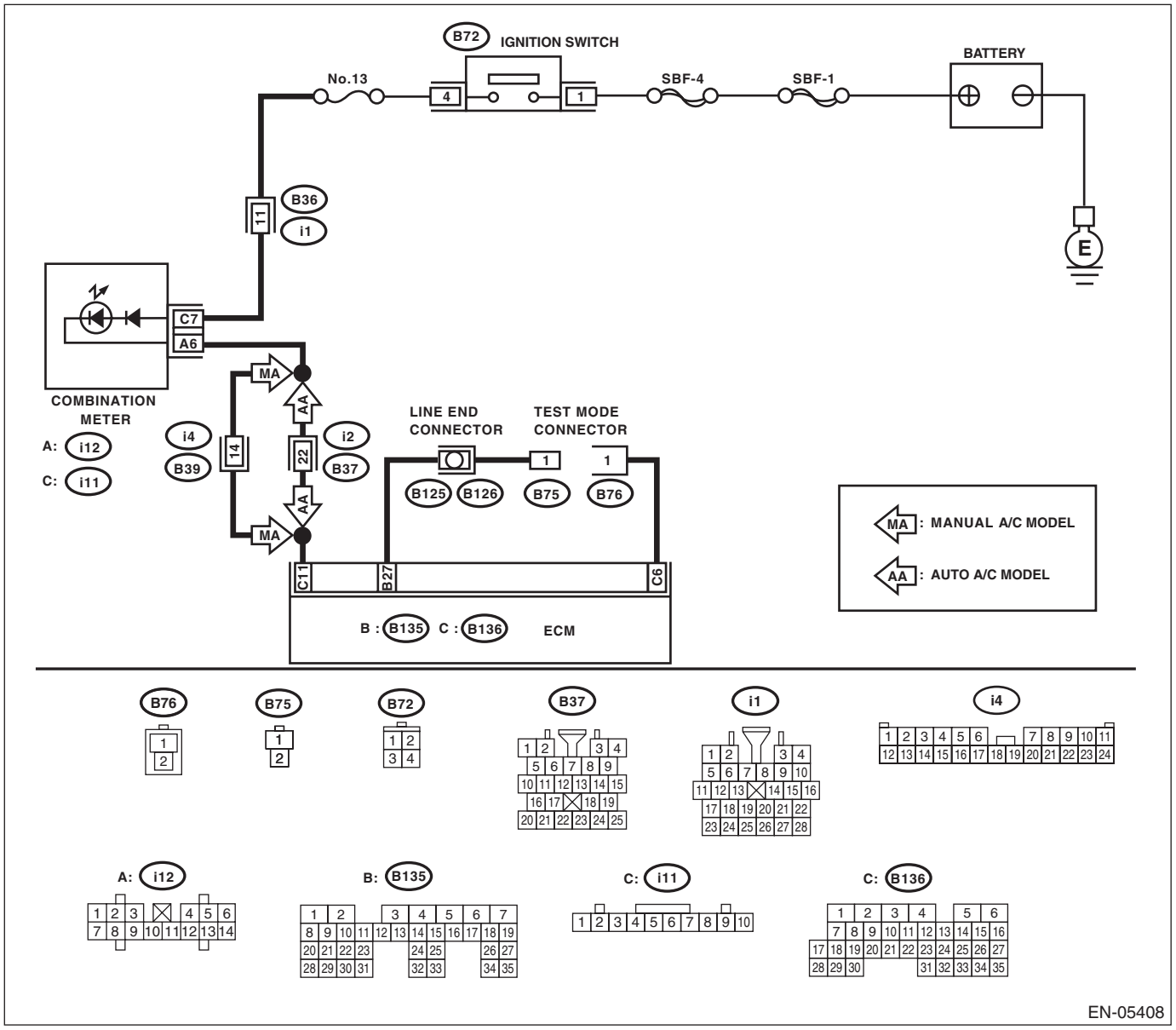

Step		Check	Yes	No
1	**CHECK STATUS OF MALFUNCTION INDICATOR LIGHT.** 1) Turn the ignition switch to OFF. 2) Disconnect the test mode connector. 3) Turn the ignition switch to ON. (engine OFF)	Does the malfunction indicator light illuminate?	Go to step **2**.	Repair the malfunction indicator light circuit. <Ref. to EN(H4DOTC)(diag)-57, MALFUNCTION INDICATOR LIGHT DOES NOT COME ON, Malfunction Indicator Light.>
2	**CHECK HARNESS BETWEEN ECM AND COMBINATION METER CONNECTOR.** 1) Turn the ignition switch to OFF. 2) Disconnect the connectors from the ECM. 3) Turn the ignition switch to ON.	Does the malfunction indicator light illuminate?	Repair the ground short circuit of harness between ECM and combination meter connector.	Go to step **3**.
3	**CHECK HARNESS BETWEEN ECM AND TEST MODE CONNECTOR.** 1) Turn the ignition switch to OFF. 2) Disconnect the connectors from the ECM. 3) Measure the resistance of harness between ECM and test mode connector. ***Connector & terminal*** ***(B76) No. 1 — (B136) No. 6:***	Is the resistance less than 1 Ω?	Go to step **4**.	Repair the open circuit of harness between ECM and test mode connector.
4	**CHECK POOR CONTACT.** Check for poor contact of the ECM connector.	Is there poor contact in ECM connector?	Repair poor contact of the ECM connector.	Go to step **5**.
5	**CHECK HARNESS BETWEEN ECM AND TEST MODE CONNECTOR.** Measure the resistance of harness between ECM and test mode connector. ***Connector & terminal*** ***(B135) No. 27 — (B75) No. 1:***	Is the resistance less than 1 Ω?	Go to step **6**.	Repair the open circuit of harness between ECM and test mode connector.
6	**CHECK POOR CONTACT.** Check for poor contact of the ECM connector.	Is there poor contact in ECM connector?	Repair poor contact of the ECM connector.	Replace the ECM. <Ref. to FU(H4DOTC)-50, Engine Control Module (ECM).>

F: MALFUNCTION INDICATOR LIGHT REMAINS BLINKING

DIAGNOSIS:

Test mode connector circuit is shorted.

TROUBLE SYMPTOM:

Malfunction indicator light blinks at a cycle of 3 Hz when the ignition switch is turned to ON.

WIRING DIAGRAM:

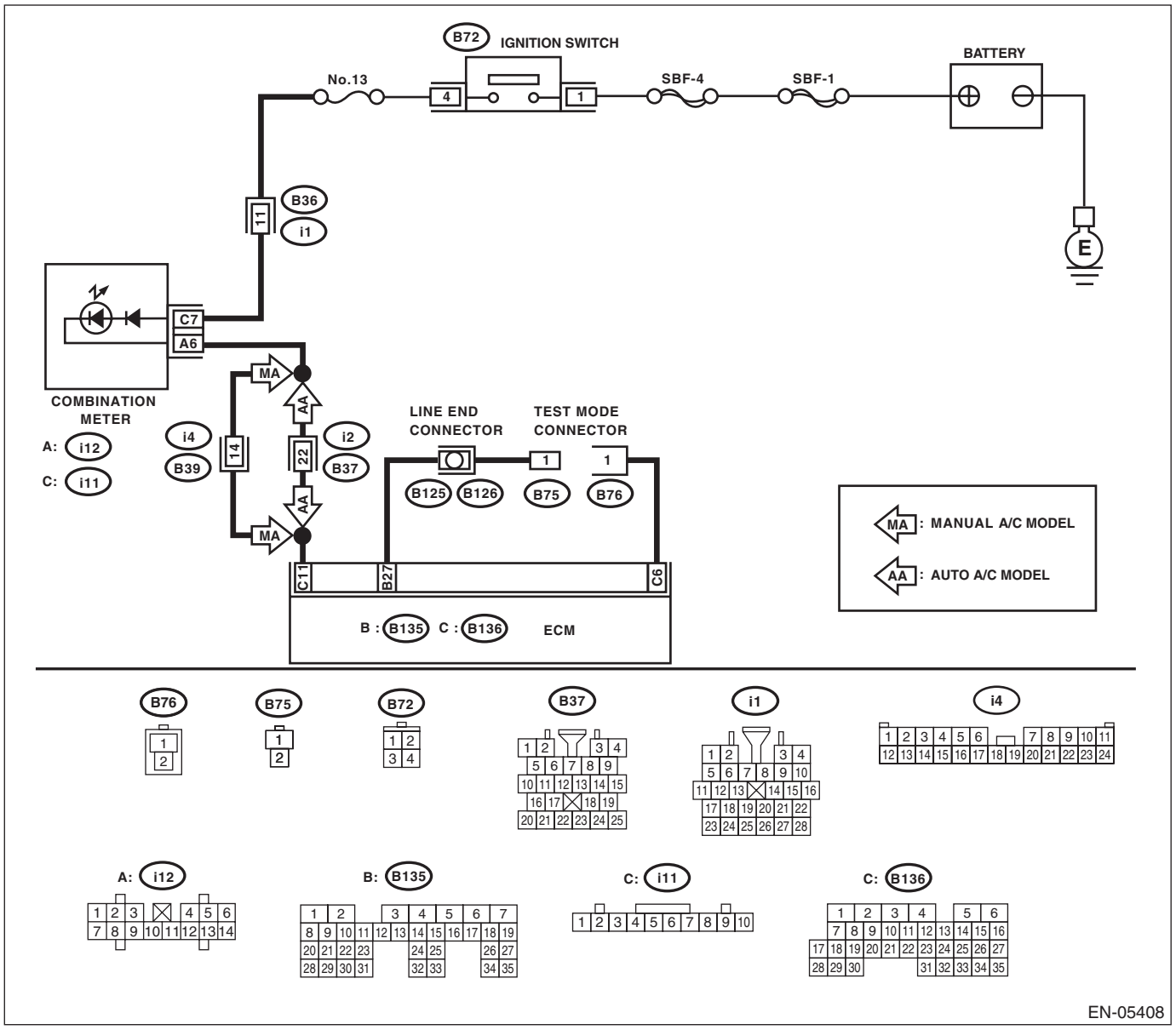

Step		Check	Yes	No
1	**CHECK TEST MODE CONNECTOR.** 1) Disconnect the test mode connector. 2) Turn the ignition switch to ON.	Does the malfunction indicator light blink?	Go to step **2**.	System is normal. NOTE: Malfunction indicator light blinks at a cycle of 3 Hz when test mode connector is connected.
2	**CHECK HARNESS BETWEEN ECM CONNECTOR AND ENGINE GROUND TERMINAL.** 1) Turn the ignition switch to OFF. 2) Disconnect the connectors from the ECM. 3) Measure the resistance of harness between ECM and chassis ground. ***Connector & terminal*** ***(B135) No. 27 — Chassis ground:***	Is the resistance less than 5 Ω?	Repair the short circuit of harness between ECM and test mode connector.	Replace the ECM. <Ref. to FU(H4DOTC)-50, Engine Control Module (ECM).>